D-ONE®

DIVING**HELMET**

DRASS®

TRADITION
INNOVATION
PERFORMANCE

DRASS Galeazzi, founded in **1927** with the aim of designing and manufacturing diving systems and equipment, invested heavily into fostering innovation design of its products.
The industry had been utilizing a cylindrical shape for deep dive products, but when Drass Galeazzi introduced the spherical shape to the world, great depths were suddenly reachable and new frontier opened up for everyone.
Throughout the years, DRASS Galeazzi has continued its tradition of innovation and with extensive field experience coupled with decades of innovative equipment development, DRASS Galeazzi Research and Development Department initiated in 2017 its newest challenge of designing and developing a Diving Helmet called the D-ONE.
All of the progress and innovative design techniques that DRASS R&D has developed, comes from creating equipment that is at the cutting edge of technology and production quality. This ensures the highest level of safety for the operators involved in the Commercial Diving activities and, at the same time, satisfies the desire for stunning design as per typical Italian tradition.
DRASS R&D Team is not comprised simply of highly skilled Design Engineers, but also includes Professionals with wide-ranging experience in the Commercial Diving sector.
This culmination of experience, professional diversity, and innovative focus has enabled the development of products that provide extraordinary value and set us apart from our competitors.
Much of the team being physically and personally connected with the Oil & Gas Commercial Diving sector for decades has provided invaluable insight.
This extensive and increasingly rare experience is always incorporated into every detail of every product we manufacture.
It allows for a dynamic and methodology within Drass which drives innovation and keeps us at the forefront of the industry year after year.
The **D-ONE** represents the highest echelon of product which DRASS proudly offers in the marketplace.
Confident that the proposed innovations will maximize Diver safety and comfort while providing ergonomic implementation and usage practicability, Drass believes the D-ONE can greatly serve the interests of the Operators in this technological and demanding sector.

This Helmet has been tested for air use up to -50 msw as per "European Standard EN 15333-1" of January 2008, "Respiratory equipment - Open-circuit umbilical supplied compressed gas diving apparatus - Part 1: Demand apparatus" and EU Directive "EU 2016/425" that substitutes "EU 89/686/EEC".

ADI DESIGN INDEX SELECTION 2020

DESIGN INDEX ADI 2020


D-ONE®
DRASS

ERGONOMICS EFFICIENCY DESIGN

Ergonomically engineered, the Helmet's rear angled design allows for a more comfortable experience providing Divers with an improved range of motion with decreased fatigue especially when facing upwards. The helmet offers an increased and optimized visual field with a simplified donning and removal process.

VISION

The helmet design places the face closer to the viewport and the viewport design allows for an increased field of view compared to other products on the market.

REAR ANGLE

The helmet's 30° rear-angled design enables a comfortable donning and removal of the helmet. Donning the helmet is incredibly fast and easy, allowing the Divers to properly close and open the helmet by themselves in a safe and efficient way.
When facing upwards the rear-angled design offers a more natural and comfortable method of tilting the head upwards with less stress and fatigue even during prolonged dives.

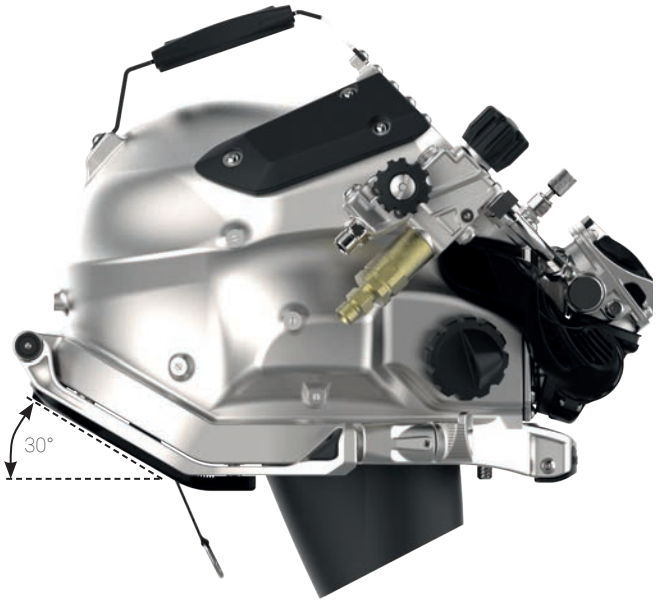

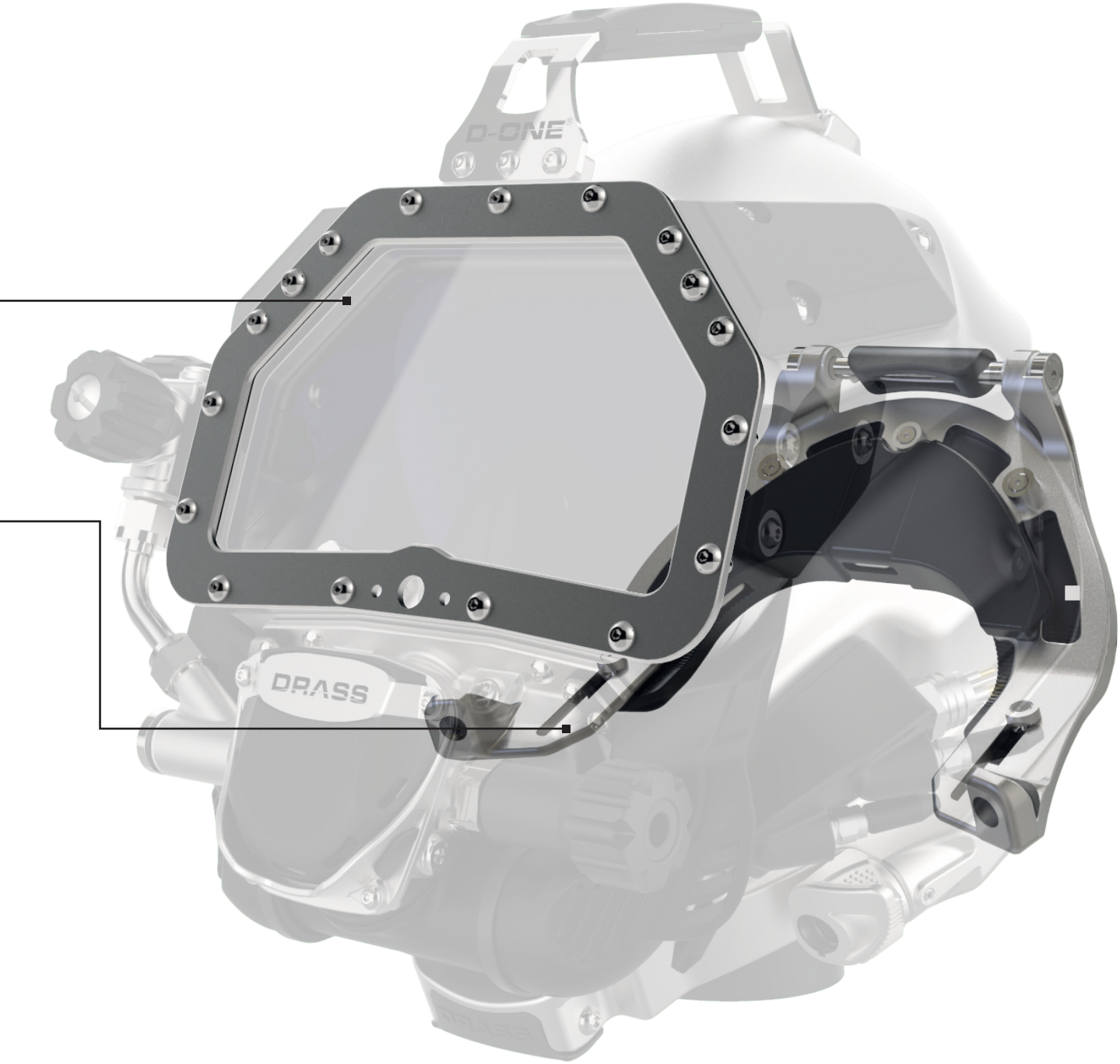
D-ONE
DRASS

SIMPLE APPROACH FOR EVERYONE

Maintenance and spare parts replacement for the DRASS D-ONE Helmet is completed by a Dive Technician.
For simple routine maintenance, a Diver should be familiar enough with his helmet to perform the minimum maintenance in order to maximize the life or his helmet and keep it in good working order.
DRASS has optimized the design of the helmet spare parts which allows an easier, simplified and safer approach to the maintenance.

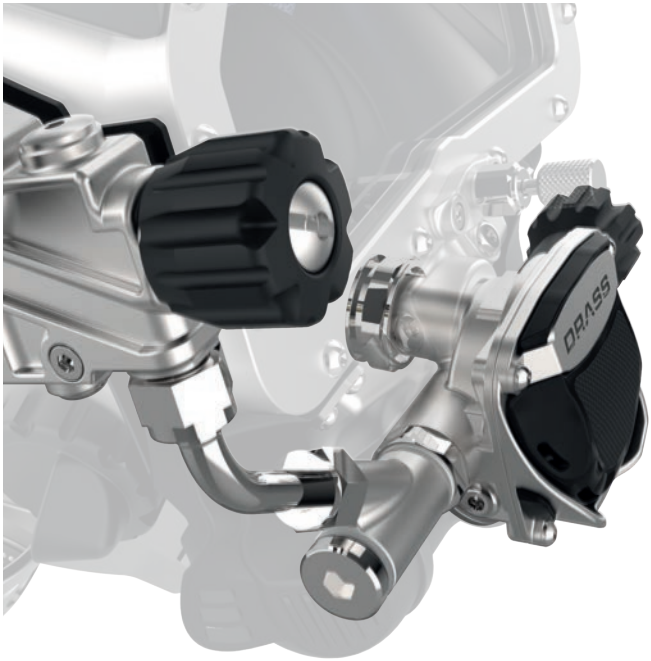

SIDE-BLOCK ASSEMBLY

Installation and removal of the side-block for maintenance is done quickly and easily thanks to its design which properly seals with the helmet by means of O-rings which renders silicone sealant a thing of the past. The helmet is immediately ready for use with no waisted time for sealant curing (typically 24hrs).

NECK-DAM INSTALLATION

The neck-dam installation is performed by simply removing the collar over the stepped ring and placing the new neck-dam into position while engaging the front and rear alignment notches.
The O-ring shaped rim of the neck-dam mates perfectly with the machined groove in the stepped ring. Once in position, it is simply a matter of screwing in all screws to have the helmet ready for the next dive. No more struggling with neoprene positioning or drilling. *(Pat. Pending)*

BALANCED DEMAND REGULATOR SETTING

The setting of the Balanced Demand Regulator is simple when utilizing the proper tool.
All regulator parts remain in position, the tool is installed by removing a dedicated plug and the regulator is set to the correct pressure value quickly and easily.

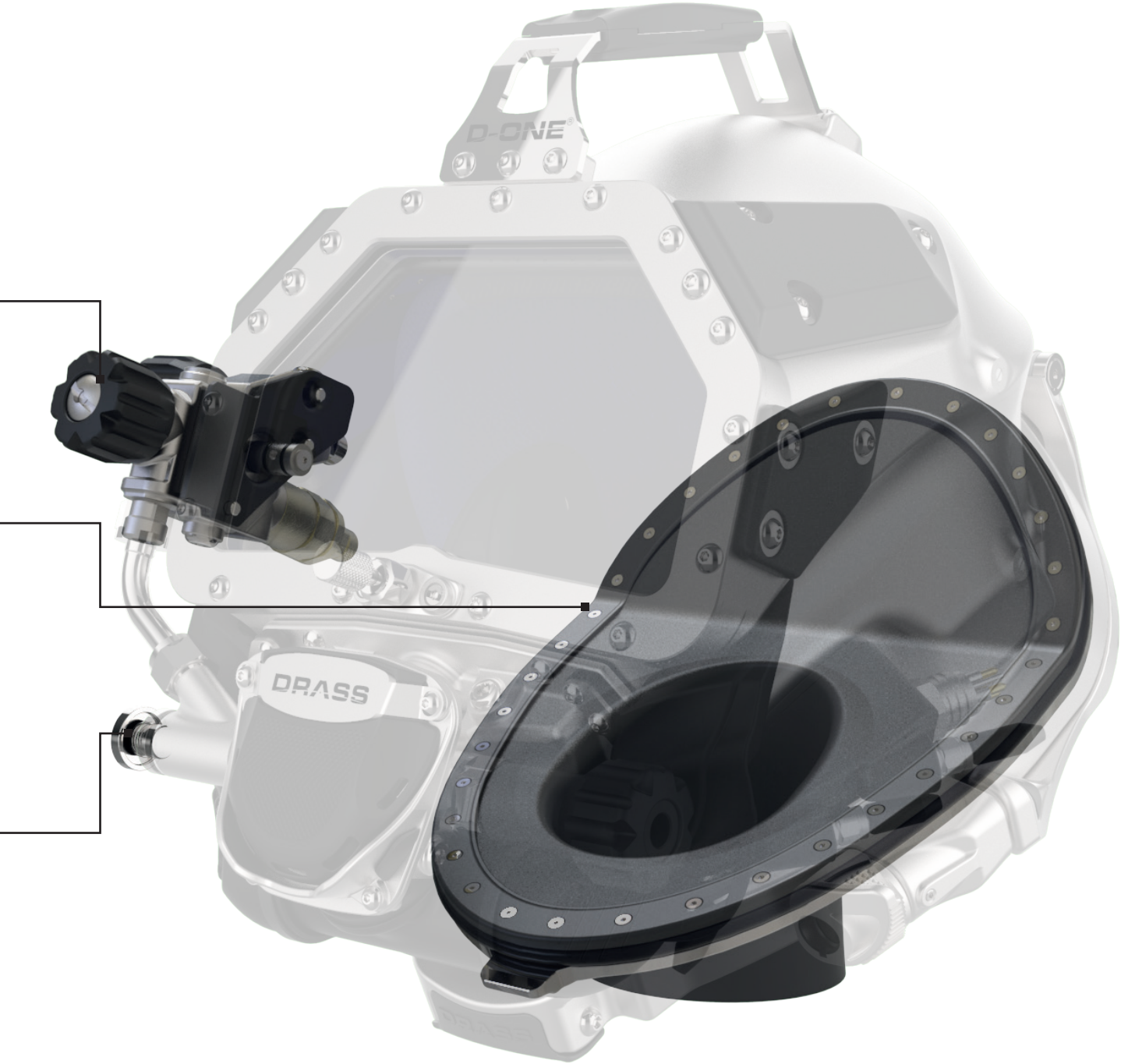
D-ONE
DRASS

INTEGRATED COMPONENTS SYSTEM

The helmet is designed to allow the installation of a video camera and light which enables the remote monitoring of ongoing underwater activities.
Both can be installed with a standard method, making use of typical commercial systems or by taking advantage of the DRASS patented dedicated system that provide an improved cable-routing offering superior safety.

VIDEOCAMERA AND LIGHT

The two polyurethane lateral plates act as bumpers, but once removed, offer the possibility to install a video camera and light.
If the helmet owner intends to install his own or aftermarket video camera and light, the supporting brackets design are left to the owner engineering, whereas if the DRASS dedicated video camera and light are utilized, the video camera and light built-in concept design takes advantage of the DMSM™ system.
DRASS Diving Monitoring System Module™ consists of a pod installed on the port side of the helmet, similar to the comms pod. The system foresees the routing of the video camera and light cables inside the helmet, totally avoiding the usual tangle and flutter of cables around the helmet, preventing any damage to the connectors, thus ensuring a long-lasting life cycle to the installed systems.

DIVER MONITORING SYSTEM MODULE

Another interesting feature of the DMSM™, at present still under development, is the Diver's monitoring System Sensors that allows to receive remotely and in real-time the diver's:

- Breathing Pattern (Work Of Breathe)
- Bail-Out Pressure
- Diver's Orientation
- Gas Temperature
- Hot Water Temperature
- Depth

All above divers' parameters are gathered by sensors placed at strategic positions and the relevant signals are routed, via the divers' umbilical, to the surface at Diving Supervisor's diving control panel.


DRASS

CUSTOMISE YOUR D-ONE

The helmet, aside from the standard video/light setup, can be equipped with dedicated accessories for specific activities whilst maintaining the overall shape and dimension, such as:

- Welding shield
- Hot water shroud
- Defogger

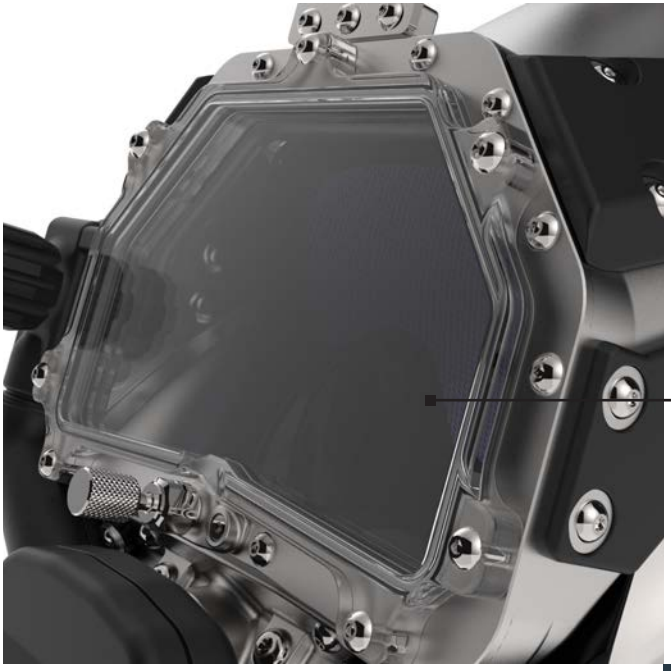

WELDING SHIELD

For welding and/or oxy arc cutting activities, the helmet can be equipped with a dedicated shield to protect the diver's eyes.
The screws of the frame securing the helmet lens are used for the installation of the optional Welding Shield where standard welding lenses may be installed.

WATER SHROUD

The Helmet CE certification consider a water temperature ranging between 4°C and 34°C, however, the helmet may be used at lower temperatures with the installation of the water shroud. In case of sand blasting or diving in polluted/contaminated waters, the installation of the water shroud can isolate the helmet from the outside. This can prevent the ingress of sand or other material as well as the contact with the polluted/contaminated waters enabling a safer approach to these types of activities. *(Pat. Pending)*

DEFOGGER

A Defogging system can also be installed. It is a second lens that, by means of a dedicated frame, is installed on the outer side of the viewport and connected to the hot water supply. The hot water flowing between the 2 lenses prevents the buildup of fog inside the helmet whilst diving in cold water thereby providing increased comfort to the diver.


D-ONE®
DRASS

OUR DNA

The helmet is equipped with some safety features that ensures it is properly donned, and even in case of malfunction, a tight seal is maintained.
Thanks to its advanced design, the helmet cannot be flooded or dislodged from the diver's head.

DOUBLE-ACTION PULL-PIN & SAFETY RETAINER

The helmet, once donned, is held in position by means of the locking collar. Opening and closing of the locking collar is performed by means of a latching system made with a double-action operated pull-pin and safety retainer.
In the unlikely event of locking collar pin failure, a safety system prevents the Helmet from unexpectedly opening underwater.
This prevents the helmet from being dislodged and floating upwards from the air inside leading to flooding and/or drowning.


D-ONE
DRASS

TAILORED FOR DIVERS

The Helmet shell is fully made of stainless steel 316L, and CNC machined ensuring customer with a long-lasting product of the highest quality.
Majority of gaskets utilized are made of polyurethane thus ensuring a long lasting life in the saline environment.
Shell can be easily cleaned making use of scotchbrite® sponge type or similar cleaner.

Weight:	~ 14,8 Kg
Porthole:	Polycarbonate 3.1
Side Block:	Stainless Steel
Hardware:	Stainless Steel / Chromed Brass
Control knobs:	Polyurethane
Neck Dam:	Neoprene/Polyurethane
Neck Dam O-Ring:	Buna
Head Cushion:	Nylon
Lubricants:	Christo Lube®
Maximum depth on air:	-50msw
Umbilical minimum I.D.:	3/8" (9,5mm) of maximum length of 180 m
Gas supply:	AIR

POLYURETHANE GASKETS

The majority of the gaskets utilized for the helmet seals are made of polyurethane. This material has been proven to be resistant to the saline environment in which the helmet is generally utilized. Gaskets sealing the Balanced Demand Regulator Pod and the Port view lens are made of this resistant and long-lasting material.

"BAFFO" EXHAUST SYSTEM CONFIGURATION

The optimized exhaust system dubbed "Baffo" has been conceived and designed to allow the final user to exhale more comfortably. The synergy between the Balanced Demand Regulator exhaust valve and the "Baffo" design, drastically lowers the exhalation effort for maximum diver comfort. *(Pat. Pending)*

BDR BALANCED DEMAND REGULATOR

The Balanced Demand Regulator, made entirely of stainless steel and precisely machined with the tightest tolerances, is part of the interchangeable pod. It has been designed to minimize inhalation effort whilst providing maximum breathable air volume. The measured Respiratory Minute Volume (RMV) and Work of Breathing (WOB) values far exceed the Standard requirements and ensure a smooth breathing pattern at any depth. *(Pat. Pending)*


D-ONE
DRASS

ALL FOR ONE AND D-ONE FOR ALL

The helmet has been designed with a concept of modularity: one helmet shell to suit varying dive environments.

- Standard Pod for Air Diving
- Reclaim Pod for Air Diving in polluted/contaminated waters
- Optional Pod

STANDARD POD FOR AIR DIVING

The helmet is supplied with a standard Pod for Air Diving activities. It is easily removed and interchangeable with a more specialized Pod for more specialized diving.

POD FOR AIR DIVING & RECLAIM

In the event that diving in polluted/contaminated waters is required, the helmet can be configured with a reclaim valve that completely prevents contact of the valve with the outside water. Coupled with a dry-suit and water shroud, the diver will effectively be sealed off from the surrounding environment.

POD FOR REBREATHER & RECLAIM

The helmet will be soon configurable with a dedicated Pod to support the installation of a Rebreather and Reclaim system. In this way, the helmet can fulfill Commercial Diving's most stringent requirements for the Norwegian Oil & Gas sector and soon of the North Sea.


D-ONE
DRASS

YOUR D-ONE

D-ONE®
AIR

WORK IN PROGRESS

D-ONE®
RECLAIM

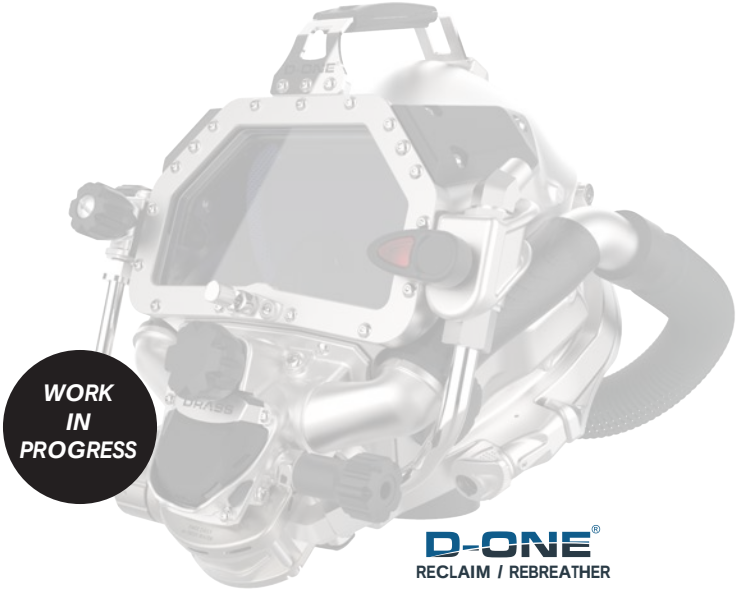

WORK IN PROGRESS

D-ONE®
RECLAIM / REBREATHER

MAKE YOUR D-ONE UNIQUE!

Select your most suitable standard configuration, add the dedicated accessories, and get a customised helmet, ready to satisfy your diving needs.

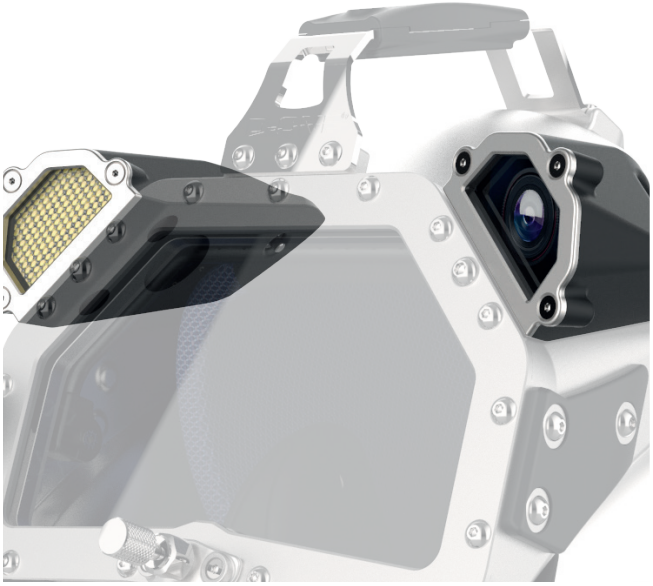

CAMERA AND LIGHT

WATER SHROUD

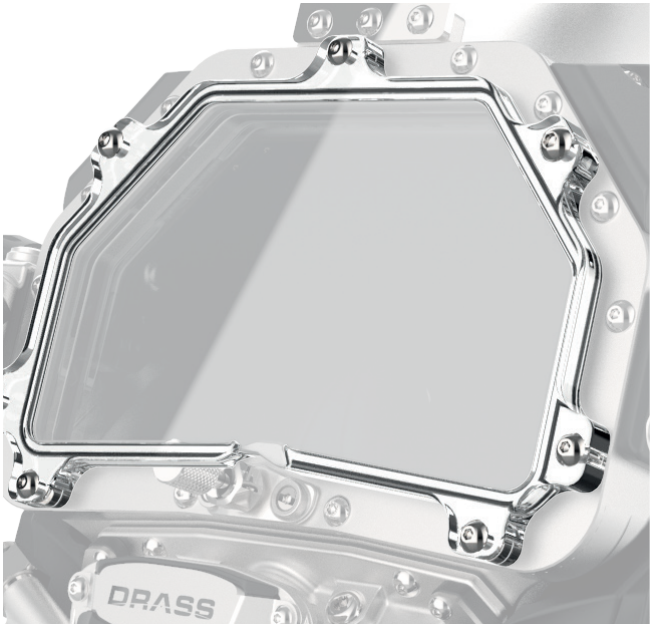

DEFOGGER

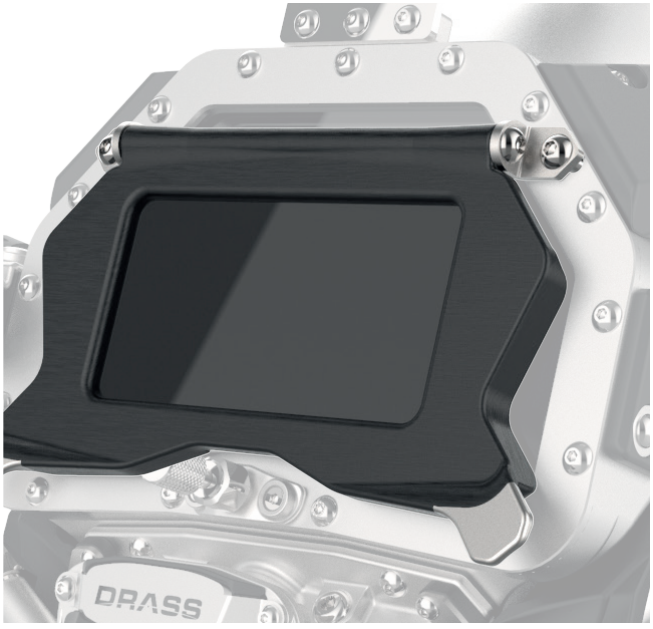

WELDING SHIELD

REV 1.1

90 YEARS

FROM TRADITION TO TECHNOLOGY

Continuously active since 1927 with the Galeazzi business line, Drass has extensive experience in manned underwater technology, establishing the world record for deep diving immersion with an atmospheric diving suit in 1937.
The company is now an international leader in commercial diving, medical hyperbaric, midget and compact submarines and vehicles for special forces.

D-ONE DIVINGHELMET

DRASS®

Drass Galeazzi s.r.l.u.
Headquarter: Via T. Mattei, 4
57121 Livorno – Italy
Phone +39 0586 421221 - Fax +39 0586 421223
email: info@d-one.tech • www.d-one.tech